ESTIC

With us, the Future

Faster is Better

High Speed Pistol Grip Tool

Handy 2000 Lite

Transducerized Electric Handheld Nutruner

High Speed Pistol Grip Tool | Handy 2000 Lite

■ Tool Specifications

Model	Motor Output (W)	Drive Mode	Torque Range		Max. Speed (rpm)		Output Drive		Weight		Length (mm)
			(Nm)	(ft lb)	at 100V	at 200V	(mm)	(inch)	(kg)	(lb)	
EH2-H0015-P	50	Pulse	3-15	2.2-11.1	2000	3075	9.5	3/8	1.2	2.6	204
EH2-H1030-P	100	Pulse	6-30	4.4-22.1	2000	3075	9.5	3/8	1.4	3.1	223
EH2-S1050-P	100	Pulse	10-50	7.4-36.9	1400	2121	12.7	1/2	1.7	3.7	252

■ Controller Type

Model	Input Volatge
EH2-HT40 series	AC100-115V ±10% / AC200-230V ±10%

■ Cable

Description	Model	Length (m)
Standard Cable	EH2-CVS05-SS	5
Standard Cable	EH2-CVS10-SS	10
Standard Cable	EH2-CVS15-SS	15
Extension Cable	EH2-CVE05-SS	5
Extension Cable	EH2-CVE10-SS	10
Extension Cable	EH2-CVE15-SS	15

■ EH2-H0015-P

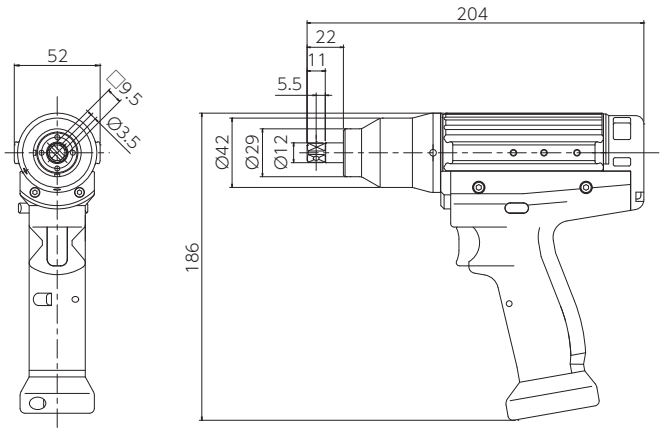

■ EH2-H1030-P

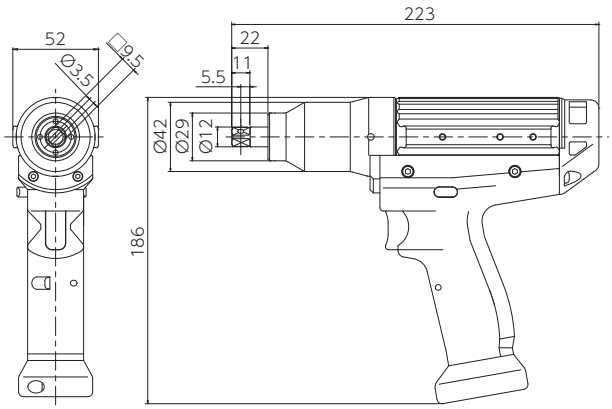

■ EH2-S1050-P

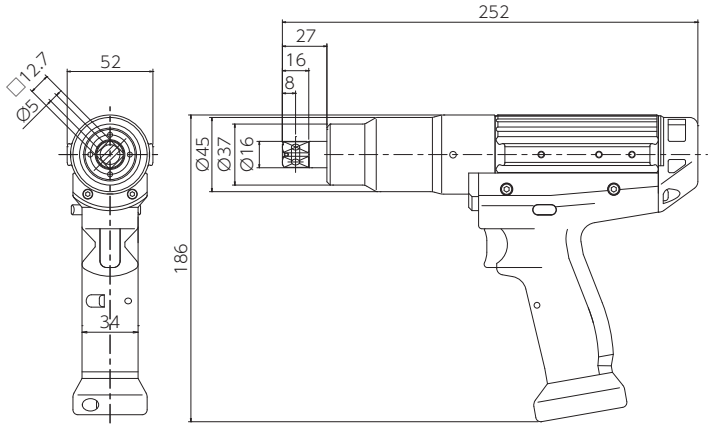

ESTIC
With us, the Future

ESTIC CORPORATION
www.estic.co.jp

Head Office & Osaka Sales Office
International Department
2-5-9 Hashibahigashino-cho, Moriguchi City, Osaka, 570-0031 Japan
Phone : +81-6-6993-8835 Fax : +81-6-6993-8881
E-mail : int_dep@estic.co.jp

Tokyo Sales Office
2F Shinyokohama Bousei Bldg., 3-20-12 Shin-Yokohama, Kouhoku-ku, Yokohama-shi, Kanagawa Pref. 222-0033, Japan
Phone : +81-45-474-3036 Fax : +81-45-474-3037
E-mail : tokyo_office@estic.co.jp

Chubu Sales Office
4F Yamahichi Higashiokazaki Bldg. 19-13 Kawabata, Myoudaiji Cho, Okazaki City, Aichi, 444-0864, Japan
Phone : +81-564-66-0510 Fax : +81-564-66-0515
E-mail : chubu_office@estic.co.jp

SUBSIDIARIES

SHANGHAI ESTIC CO., LTD.
6th Plant, 51 Gate, 1159, East Kangqiao Road, Pudong, Shanghai, China
Phone : +86-21-6813-0333 Fax : +86-21-6813-0777
E-mail : ecc@estic.cn

ESTIC (THAILAND) CO., LTD.
19 Naradhiwas Rajanakarin Road, Chong Nonsi, Yannawa, Bangkok, 10120, Thailand
Phone: +66-2-678-0171 Fax: +66-2-678-0173
Email: sales@estic.co.th

ESTIC AMERICA, INC.
Suite 220, 1895 Airport Exchange Blvd, Erlanger, Kentucky, 41018 U.S.A.
Phone: +1-859-746-8800 Fax: +1-859-746-8777
Email: support@estic-america.com

● The colors of the products may slightly differ from those of the actual products, which inevitable in printing.
● The specifications and designs of the products may be changed without previous notice.

JQA-2805

This catalog uses vegetable oil ink.

The contents of the catalog are as of July, 2014.