Ingersoll Rand

Air Winches & Hoists

From 125 kg to 200 t capacity

Air Winches & Hoists

The most comprehensive range of Air Winches, Air Chain Hoists and BOP Handling Systems on the market – 0.125 t to 200 t capacity. Setting the standards in winch and hoist technology, our lifting equipment are known throughout the Heavy Industry, the Mining and Tunneling Industry, the Public Works and the Offshore Drilling Industry for their reliability and safety.

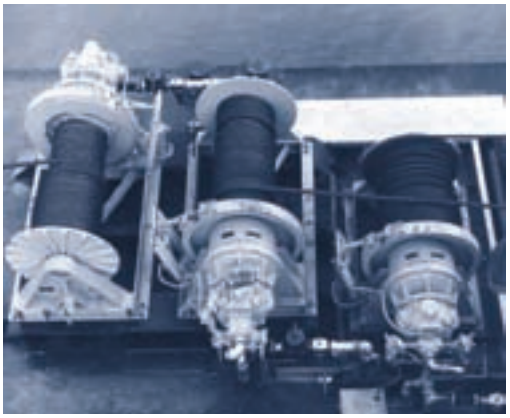

Air Winches & Hoists
Table of Contents

Air Winches – 150 kg to 10 t

Air Hoists – 125 kg to 100 t

BOP Handling Systems
25 t to 200 t

Manual Equipment
450 kg to 20 t

Liftstar® & Pullstar® Air Winches 5

LIFTSTAR® lifting air winches 7
PULLSTAR® pulling air winches 8
LS2-150RLP dedicated ManRider™ 12

FA Infinity™ Air Winches 14

Utility Air Winches 15
Guideline and Podline Air Winches 17
Dual Rated Offshore ManRider™ Air Winches 18
FA150KGi-MR Dedicated ManRider™ 24

CLK & MLK Air Chain Hoists 31

Hook & Trolley Mount Hoists 32

Liftchain® Air Chain Hoists 34

Hook-Mount Configuration 35
Trolley-Mount Configuration 36
Low-Headroom Configuration 37
"Miner" Series 38

BOP Handling Systems 48

BS Series 50
BHS Series 56

Manual Equipment 61

L5H and SLB Manual Lever Hoists 62
VL2 Manual Hand Chain Hoists 63
SMB Manual Chain hoists and P & C Pullers 64
PT & GT Series Manual Trolleys 65

Additional Information 66

Winch Check List 66
Hoist Check List 67

Ingersoll Rand

Air Winches

The Ingersoll Rand line of air winches combines the best ideas and innovations resulting from over 200 years of experience in solving the most challenging lifting, pulling and positioning applications in the world's toughest industries.

Our air winches are manufactured in either Douai, France (gear type motor winches) or Kent, Washington, USA (piston type motor winches).

Enjoy the wide selection offered by these two lines and choose the model that best fits your application.

Ingersoll Rand

Liftstar® & Pullstar® Series Air Winches

0.15 - 10 t Load Capacity

Designed to work in difficult environments, these winches feature a low maintenance, highly reliable gear motor with high torque output that translates into smooth starts and stops. Their rugged and compact design makes them ready to take on your most challenging applications.

- **LIFTSTAR® (LS) models are designed for lifting applications with a 5:1 design factor at rated capacity.**
- **PULLSTAR® (PS) models are designed for pulling applications with a 3.5:1 design factor. They come standard with a drum disengaging clutch for free spooling unloaded wire rope.**

Reliable gear motor

- Its unique design with only two moving parts makes it ideal for severe applications in hot, cold, dusty, dirty, explosive and wet conditions.
- Less sensitive than other motors to long storage period or long period with no use.
- Virtually maintenance free and reduced downtimes.

Rugged construction

- Originally designed for the mining industry, the LS and PS winches are very robust and durable.
- Cast iron and steel construction.

Meets worldwide standards

- European standards FEM 9.511 and FEM 1001 for lifting.
- U.S. standard ASME/ANSI B30.7.
- Duty rating FEM 1Bm / ISO M3.

Gear Motor

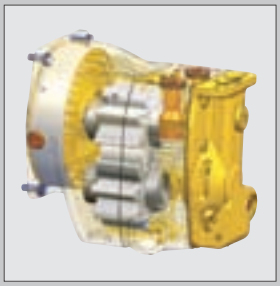

Features

- Light weight and compact design. Easy to carry.
- Robust steel construction.
- Automatic self-adjusting disc brake.
- Reliable gear type air motor in composite material.
- High efficiency planetary gear box.
- Flameproof by nature.
- Low noise level, quiet operation.
- Variable speed and precise positioning though direct control lever with "lift & shift" system with automatic return to neutral position or through progressive remote pendent.
- Declutchable drum on Pullstar® haulage versions for free spooling.
- Individually load tested before shipment – Delivered with manufacturer's test certificate.

LS2000R-L-G

CE marked models are compliant with the latest European machinery directive No 2006/42/EC and the European standard for power driven winches EN 14492-1. These models include as standard the following safety features: Drum guard — Emergency stop with main air shut-off valve as per EN 418. — Overload protection (LS models only) — Upper / lower limit switches (LS models only) — CE declaration of conformity.

Liftstar® and Pullstar® winches are, by design, particularly suitable for use in potentially explosive atmospheres, unlike electric winches. They are classified as standard as equipment category 2 for applications in zone 1 and 2 (as per ATEX 94/9/CE directive for surface industry). ATEX marking: **Ex II 2 GD c IIB 135°C X**. For the mining industry they can be fitted with an optional package to comply with requirements of equipment category M2 (consult us).

Liftstar® & Pullstar® Series Air Winches

0.15 - 10 t Load Capacity

LIFTSTAR® Lifting Series

LIFTSTAR® winches are designed with a 5:1 minimum safety factor at rated capacity.

- LIFTSTAR® winch always lifts its rated capacity at any layers of rope.
- LIFTSTAR® winch is designed so that the line speed remains constant on all layers when lifting its nominal load.
- The drums are generously dimensioned to obtain a minimum drum to rope diameter of 18:1 to avoid excessive bending of the wire rope thus increasing its life time.
- The rope storage capacities correspond to the maximum length of rope which can theoretically be stored onto the drum (calculated with wire rope tightly wound at full drum).
- The rated "working" rope capacity leaves a free space of 1.5 times the nominal rope diameter from the top of the drum flanges (as per the European standard EN 14192-1). This helps preventing the wire rope from running off the drum flanges during operation.

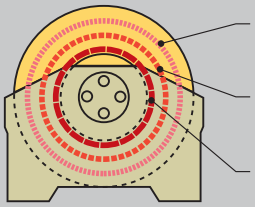

Top layer rating *
(i.e. drum flange diameter less 1.5 times the rope diameter)

Mid-drum *

Lowest layer *

** On LIFTSTAR® winches the lifting speed with rated load is constant at all layers.*

PULLSTAR® Pulling Series

PULLSTAR® winches are designed with a 3.5:1 minimum safety factor at rated capacity.

- The rated capacity of the PULLSTAR® winches is calculated at the lowest rope layer on the drum. It corresponds to the maximum pulling force allowed. Refer to detailed curves on page 8 to get corresponding pulls / speeds at different layers.
- Pulling winches are intended for use on horizontal surfaces with no or insubstantial inclination.
- PULLSTAR® are fitted as standard with a free spooling clutch for rapid manual rope unwinding. The manual clutch is secured against unintended operation.

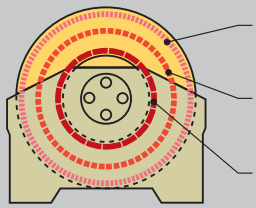

Top layer
Maximum speed capacity with minimum pull.

Mid-drum

Lowest layer rating
Corresponds to the maximum pulling force allowed on PULLSTAR® winches.

LS2-600R-L-CE

PS2400R-L-E

PS10000R-L

LIFTSTAR® Lifting Air Winches

Reliable and safe, this modern range of winches is designed for harsh environments. They can be equipped with many options for effective adaptation to your application
(see pages 9 and 10 for details).

See dimensions on page 11.

LS2-600R-L-CE

LS1500RGC-L-CE

LS5000RGC-L-CE

Specifications at 6.3 bar dynamic pressure (when winch is running) — Working pressure range 5 to 7 bar.
As per European standard EN 14492-1 – Group of mechanism as per FEM 1Bm / ISO M3.

Model number	Rated capacity at TOP LAYER (kg)	LIFTING SPEED AT RATED LOAD at top rope layer (m/min)	at lowest rope layer (m/min)	Rated number of layers (1)	Air consumption with rated load (m^3/min)	Sound level as per EN 14492-1 dB(A)	Net weight (kg)
LS Portable Series – Lifting Ratings at 5:1 Design Factor							
LS2-300R	300	40	40	7	4	92	42
LS2-300RGC	300	40	40	7	4	92	49
LS2-600R	600	20	20	5	4	92	42
LS2-600RGC	600	20	20	5	4	92	49
LS-1500R	1 500	7	7	3	5	88	67
LS-1500RGC	1 500	7	7	3	5	85	79
LS Heavy Series – Lifting Ratings at 5:1 Design Factor							
LS2000R	2 000	20	20	5	10	95	230
LS2000RGC	2 000	20	20	4	10	95	283
LS5000R	5 000	10	10	6	10	87	645
LS5000RGC	5 000	10	10	6	10	87	760

(1) Measured with recommended rope diameter (see table below).

Rope capacity with recommended rope diameter
For storage capacities with other rope diameters, use our "drum storage calculator" at the following web address:
http://www.ingersollrandproducts.com/lifting/winches/drum.htm

Model number	Minimum rope breaking force (kN)	Recommended rope diameter (mm)	Cumulated working rope capacities in meters (2) with RECOMMENDED ROPE DIAMETER Layer 1	Layer 2	Layer 3	Layer 4	Layer 5	Layer 6	Layer 7	Max. rope storage capacity (m)
LS Portable Series – Lifting Ratings at 5:1 Design Factor										
LS2-300R	15	5	12	26	41	57	74	92	110	150
LS2-300RGC	15	5	26	54	85	117	152	188	226	307
LS2-600R	30	6.5	9	20	32	45	58	—	—	89
LS2-600RGC	30	6.5	19	42	66	93	121	—	—	183
LS-1500R	75	10	8	19	30	—	—	—	—	57
LS-1500RGC	75	10	18	40	65	—	—	—	—	120
LS Heavy Series – Lifting Ratings at 5:1 Design Factor										
LS2000R	100	13	17	36	57	79	103	—	—	156
LS2000RGC	100	13	31	65	102	142	—	—	—	230
LS5000R	250	19	21	44	69	96	125	156	—	224
LS5000RGC	250	19	44	92	145	202	263	329	—	473

(2) As per EN 14492-1, the working rope capacity leaves a free space of at least 1.5 times the nominal rope diameter from the top of the drum flanges.

PULLSTAR® Pulling Air Winches

Intended for use on horizontal surfaces with no or insubstantial inclination, the PULLSTAR® winches are fitted as standard with a free spooling clutch for rapid manual rope unwinding.

See dimensions on page 11.

PS2-1000R-PH5M-E

PS2400RGC-L-E

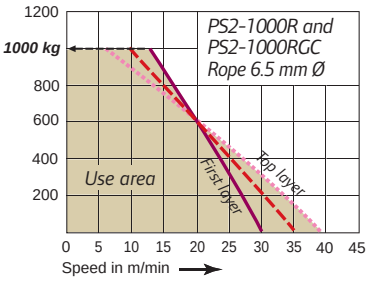

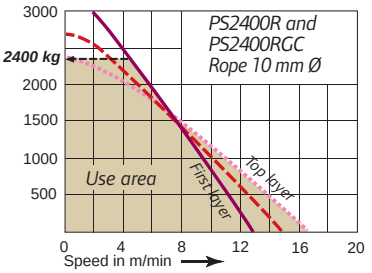

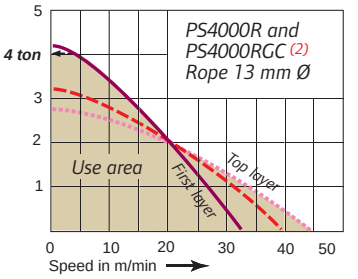

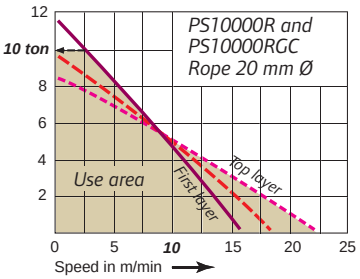

Specifications at 6.3 bar dynamic pressure – Working pressure range 5 to 7 bar.
As per European standard EN 14492-1 – Group of mechanism as per FEM 1Bm / ISO M3.

Model number	Pulling force: Lowest / top layer (kg)	Rated number of layers (1)	Air consumption with rated load (m^3/min)	Sound level as per EN 14492-1 dB(A)	Net weight (kg)
PS Portable Series – Pulling Ratings at 3.5:1 Design Factor					
PS2-1000R	1 000 / 800	5	4	92	41
PS2-1000RGC	1 000 / 800	5	4	92	47
PS2400R	2 400 / 2 000	3	5	88	62
PS2400RGC	2 400 / 2 000	3	5	85	76
PS Heavy Series – Pulling Ratings at 3.5:1 Design Factor					
PS4000R	4 000 / 2 500	5	12	95	225
PS4000RGC	3 600 / 2 500 (2)	4	12	95	278
PS10000R	10 000 / 8 000	6	12	87	640
PS10000RGC	10 000 / 8 000	6	12	87	755

(1) Measured with recommended rope diameter (see table below).
(2) For PS4000RGC, line pulls are reduced by 10% and line speeds are increased by 10%.

Rope capacity with recommended rope diameter
For storage capacities with other rope diameters, use our "drum storage calculator" at the following web address:
http://www.ingersollrandproducts.com/lifting/winches/drum.htm

Model number	Minimum rope breaking force (kN)	Recommended rope diameter (mm)	Cumulated working rope capacities in meters (3) with RECOMMENDED ROPE DIAMETER Layer 1	Layer 2	Layer 3	Layer 4	Layer 5	Layer 6	Max. rope storage capacity (m)
PS Portable Series – Pulling Ratings at 3.5:1 Design Factor									
PS2-1000R	35	6.5	9	20	32	45	58	—	89
PS2-1000RGC	35	6.5	19	42	66	93	121	—	183
PS2400R	84	10	8	19	30	—	—	—	57
PS2400RGC	84	10	18	40	65	—	—	—	120
PS Heavy Series – Pulling Ratings at 3.5:1 Design Factor									
PS4000R	140	13	17	36	57	79	103	—	156
PS4000RGC	140	13	31	65	102	142	—	—	230
PS10000R	350	19	21	44	69	96	125	156	224
PS10000RGC	350	19	44	92	145	202	263	329	473

(3) As per EN 14492-1, the working rope capacity leaves a free space of at least 1.5 times the nominal rope diameter from the top of the drum flanges.

Main options for both Portable and Heavy Series

Drum guard on PS2400R

Limit switches on LS5000R

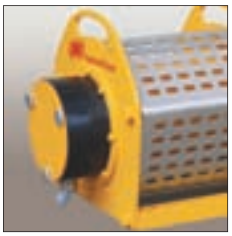

Limit switches on LS600R

LS5000R with emergency stop

LS2000R with overload protection

PHS control on PS2-1000R ➪

Drum guard

Prevents the operator from inadvertent contact with winch moving parts – Delivered as standard on all CE compliant versions.

Top and bottom limit switches

Automatically stops the winch when the travel exceeds the pre-determined working distance. Enclosed mechanism is environmentally protected. Needs to be adjusted on site as per customer configuration/application - Delivered as standard on Liftstar® lifting Series in CE compliant version.

Emergency stop

Allows the operator to quickly and safely stop the winch in case of an emergency situation. Pressing the e-stop button closes a shut-off valve which stops the main air from entering into the motor, brake is applied automatically - Delivered as standard on all CE compliant versions.

Pneumatic overload protection

Automatically stops the winch in case of overload exceeding 125 – 130% of safe working load and brake is automatically activated - Delivered as standard on Liftstar® winches in CE compliant version.

Remote Control

The LS and PS Series can be remote controlled by PHS progressive remote pilot pendent up to 20 meters. This pendent is available in both alloy and cast iron versions and can include an emergency stop.

Main options for Heavy Series only

Rope press roller assembly

Presses the wire rope onto the drum to improve winding, especially at no load conditions. Composite rollers ride on galvanised steel guides for maximum wear and corrosion resistance.

Grooved drum

Ensures better rope spooling than plain drum. Allows a greater rope fleet angle up to 2°.

Drum auto brake with skid frame or drum auto brake plus disc brake with skid frame

A drum auto brake is available instead of the internal disc brake or as a second brake. (comes with a skid frame). The auto drum brake works independently from the internal disc brake for extra safety.

Drum brake with skid frame on LS2000R

Spooling device on LS5000R

Automatic spooling device

Automatically guides back and forth the rope across the drum to ensure proper rope spooling when rope fleet angle exceeds 2°. Avoids dangerous rope built-up situations.

Liftstar® & Pullstar® Series Air Winches
0.15 - 10 t Load Capacity

LIFTSTAR® and PULLSTAR® Series Ordering Menu

To order your winch, specify complete model number code as shown below:

- **LIFTSTAR® lifting winches in CE version** are fitted as standard with: drum guard — pneumatic overload protection device — emergency stop valve (main air shut-off) — rotary limit switches (top and bottom).
- **PULLSTAR® pulling winches in CE version** are fitted as standard with drum guard and emergency stop valve (main air shut-off).

LIFTSTAR® and PULLSTAR® Portable Series:

LS1500R ● GC – L ●● – PJ12 – CE

Series and capacity	ATEX compliance	Drum	Control type	Control length	Options
LS2-300R LIFTSTAR® 300 kg **LS2-600R** LIFTSTAR® 600 kg **LS1500R** LIFTSTAR® 1 500 kg **PS2-1000R** PULLSTAR® 1 000 kg **PS2400R** PULLSTAR® 2 400 kg	No letter = As standard - ATEX compliance for group II, surface industry **M** = ATEX compliance package for group I, mining industry (on request) - only for LS1500R and PS2400R	No letter = Standard **GC** Long drum	**L** Lever control **PH** Alloy precision PHS pendent **PHR** Cast iron precision PHS pendent	**XM** Control length in metres e.g. 5M *(only when with pendent control)*	**CM** Low temperature design (-20°C DNV). Includes 3.1 material traceability certificates. **G** Drum guard for non-CE models. **H** High temp. motor (60° to 85°C). **J** Airline accessories **(1)** **M** 3.1 material traceability certificates as per EN 10204 on main load bearing parts. **P** Marine paint finish. **QZ** Offshore paint including sandblasting. **W1** ABS witness test. **W2** DNV witness test. **W3** LRS witness test. **W4** Client witness of load test. **Compliance with the European machinery directive** **-CE** LIFTSTAR® (LS) lifting models. **-E** For PULLSTAR® (PS) pulling models.

LIFTSTAR® and PULLSTAR® Heavy Series:

LS2000R ● GC – PH 5M – CKP – CE

Series and capacity	ATEX compliance	Drum	Control type	Control length	Options
LS2000R LIFTSTAR® 2 000 kg **LS5000R** LIFTSTAR® 5 000 kg **PS4000R** PULLSTAR® 4 000 kg **PS10000R** PULLSTAR® 10 000 kg	No letter = As std. - ATEX compliance for group II - surface industry **M** = ATEX compliance package for group I - mining industry (on request).	No letter = Standard **GC** Long drum	**L** Lever control **PH** Alloy precision PHS pendent **PHR** Cast iron precision PHS pendent	**XM** Control length in metres e.g. 5M *(only when with pendent control)*	**CM** Low temperature design (-20°C DNV). Includes 3.1 material traceability certificates. **FF** Skid frame + auto drum + disc brakes **FK** Drum auto brake and skid (no disc) **G** Drum guard for non-CE models. **H** High temp. motor (60° to 85°C) **J** Airline accessories **(1)** **K** Skid frame **L** Automatic spooling device **M** 3.1 material traceability certificates as per EN 10204 on main load bearing parts **P** Marine paint finish **QZ** Offshore paint including sandblasting **R** Press roller **W1** ABS witness test **W2** DNV witness test **W3** LRS witness test **W4** Client witness of load test **16** Drum grooving (number = rope diameter in mm) **Compliance with the European machinery directive** **-CE** For LIFTSTAR® (LS) lifting models. **-E** For PULLSTAR® (PS) pulling models.

(1) Add 1 for filter, 2 for lubricator, 3 for regulator (e.g. J12). For protection during shipment and due to the wide range of installation variables, the airline accessories are shipped loose for client installation.

Ingersoll Rand strongly recommends using drum guards with all winches to prevent inadvertent contact with winch moving parts.

LIFTSTAR® and PULLSTAR® Series – Dimensions in mm

Model no.	A	B	C
CE Models			
LS2-300R-CE, LS2-600R-CE	155	140	461
LS2-300RGC-CE, LS2- 600RGC-CE	311	296	617
PS2-1000R-E	155	140	427
PS2- 1000RGC-E	311	296	583
Non CE Models			
LS2-300R, LS2-600R	155	140	369
LS2-300RGC, LS2-600RGC	311	296	516
PS2-1000R	155	140	392
PS2-1000RGC	311	296	548

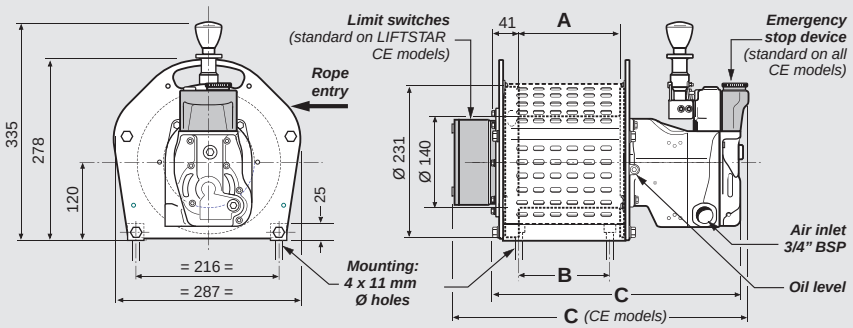

Model no.	A	B	C
CE Models			
LS1500R-CE	180	248	563
LS1500RGC-CE	360	428	743
PS2400R-E	180	248	495
PS2400RGC-E	360	428	675
Non CE Models			
LS1500R	180	248	441
LS1500RGC	360	428	621
PS2400R	180	248	509
PS2400RGC	360	428	689

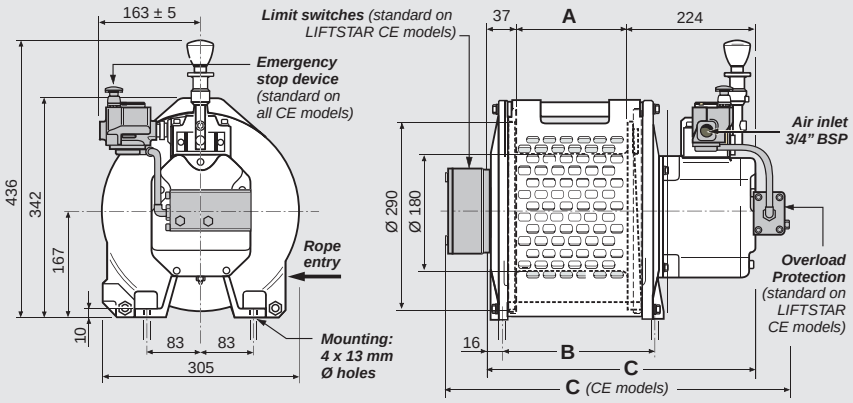

Model no.	A	B	C
CE Models			
LS2000R-CE	302	449	952
LS2000RGC-CE	485	634	1137
PS4000R-E	302	449	794
PS4000RGC-E	485	634	979
Non CE Models			
LS2000R	302	449	719
LS2000RGC	485	634	904
PS4000R	302	449	719
PS4000RGC	485	634	904

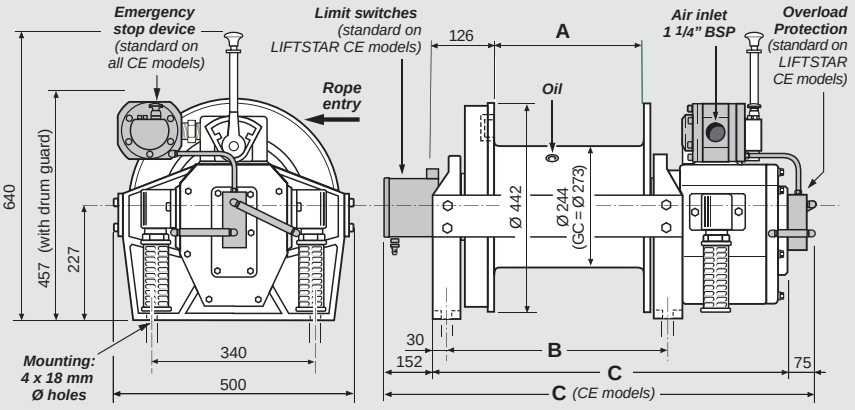

Model no.	A	B	C
CE Models			
LS5000R-CE	355	580	1090
LS5000RGC-CE	728	953	1463
PS10000R-E	355	580	979
PS10000RGC-E	728	953	1352
Non CE Models			
LS5000R	355	580	904
LS5000RGC	728	953	1277
PS10000R	355	580	904
PS10000RGC	728	953	1277

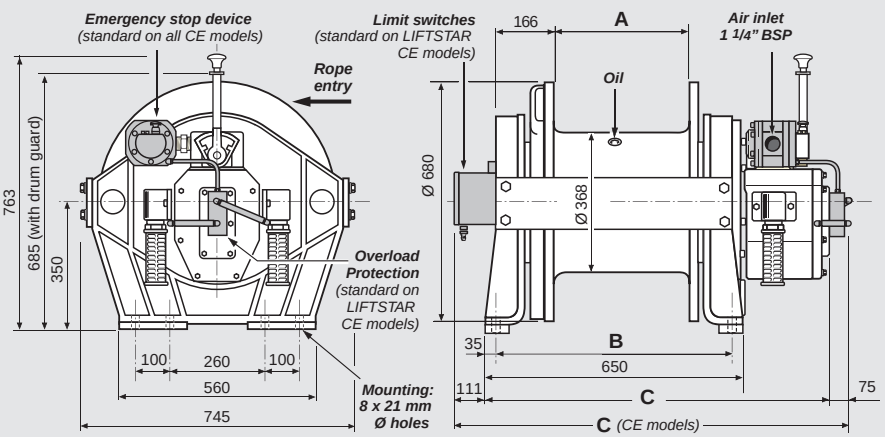

Dimensions are subject to change without notice. Please contact Client Services for certified prints.

Liftstar® & Pullstar® Series Air Winches
0.15 - 10 t Load Capacity

LS2-150RLP Dedicated ManRider™

The LS2-150RLP pneumatic ManRiding winch is specially designed for safe and reliable personnel lifting operations by means of a safety harness on offshore rigs and platforms in a heavy duty and critical offshore working environment.
It is designed to meet the latest NPD and European machinery directives and is type approved by DNV.
It is delivered with the CE mark and an EC declaration of conformity.

LS2-150RLP-L-E

Features:

- Design factor 10:1 on main load bearing parts.
- Gear type air motor – high starting torque – good spotting capability.
- High efficiency planetary gear box, totally enclosed within the drum.
- Internal automatic multi-disc brake, fully enclosed, plus external automatic drum band brake. The band brake is manufactured from stainless steel for superior corrosion protection. In case of power failure, both the band brake and the disc brake will automatically apply.
- Overload protection, acting at 130% of SWL with automatic activation of brakes.
- Emergency stop device acting directly on the main air supply.
- Slack wire detector – automatically stops the winch from paying out in case of slack wire - designed for vertical rope entry. Roller in composite material.
- Top and Bottom limit switches – stops the winch when the travel exceeds the pre-determined working distance.
- Assisting spooling device – presses the wire rope onto the drum to improve winding, specially at no load condition.
- Rugged stainless steel drum guard – meets stringent European standard EN953.
- Helical grooved drum – allows greater fleet angle up to 2° – designed for 10 mm wire rope.
- Variable speed control with "press and shift" lever. Prevents accidental throttle movements.
- Pre-equipped emergency device – allows both lifting and lowering of the winch in case of main power failure. Connects to a nitrogen bottle (nitrogen bottle as an option).
- FRL package mounted directly on the operator side of the winch.
- Marine paint for corrosion protection.
- Design temperature = -20°C.
- Suitable for zone 1 and 2 as per ATEX directive 94/9/EC – FEM Classification 4m.

Specifications at 6.3 bar dynamic pressure (when winch is running) – **As per DNV regulations**

Model number	Rated capacity at top layer (kg)	LIFTING SPEED AT RATED LOAD at top rope layer (m/min)	at lowest rope layer (m/min)	Rated number of layers	Air consumption with rated load (m^3/min)	Sound level as per EN 14492-1 dB(A)	Weight without rope (kg)	ATEX marking Ex II 2 GD c IIB 135°C X
Lifting Ratings at 10:1 Design Factor								
LS2-150RLP	150	30	30	2	2.5	89	210	√

Rope capacity in meters
For personnel lifting winches, the working rope capacity corresponds to the max. storage capacity les 2.5 layers (i.e. less 25 mm for 10 mm dia. rope)

Model number	Minimum rope breaking force (kN)	Recommended rope diameter (mm)	Cumulated working rope capacities in meters with RECOMMENDED ROPE DIAMETER Layer 1	Layer 2	Maximum rope storage capacity (m)	Number of layers
LS2-150RLP	15	10	24	54	154	5

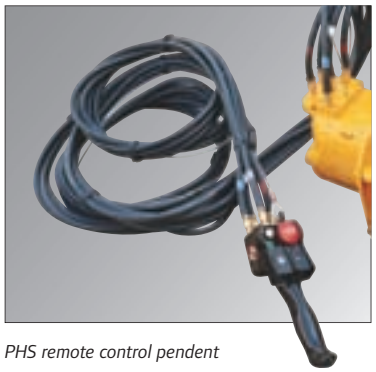

PHS remote control pendent

Remote control option

The LS2-150RLP can be remote controlled by progressive pilot pendent up to 20 m. This pendent is available in both alloy and cast iron and includes the emergency stop.

Automatic spooling device

Automatic spooling device option

It automatically guides back and forth the rope across the drum to ensure proper rope spooling when rope fleet angle exceeds 2°.

Ordering menu

To order your winch, specify complete model number code as shown below:

LS2-150RLP – L – ●● – MQZR – E

Series	Control type	Control length	Options	CE conformity
LS2-150RLP LIFTSTAR® 150 kg Manrider™	**L** Lever control **PH** Alloy precision PHS pendent **PHR** Cast iron precision PHS pendent	**XM** Control length in metres e.g. 5M *(only when with pendent control – Max. length 20 m)*	**L** Automatic spooling device **M** Material traceability certificate as per EN 10204 3.1 on main load bearing parts. **N5** (1) DNV certification (Built under DNV survey) · **QZ** Offshore paint including sandblasting. **R** Nitrogen bottle (200 bar/10 litres) with regulator (2). **W1** ABS witness test. **W2** DNV witness test. **W3** LRS witness test. **W4** Client witness of load test	**-E** Compliance with the European machinery directive

(1) Includes option codes "M" and "W2". The DNV certification includes final inspection with performance / load testing, DNV "product certificate" attesting the compliance of the unit as per the DNV type approval requirements, review of the fabrication documentation and supply of 3.1 Material traceability certificates.

(2) Allows a 50 meter lowering distance or a 25 m lifting distance.

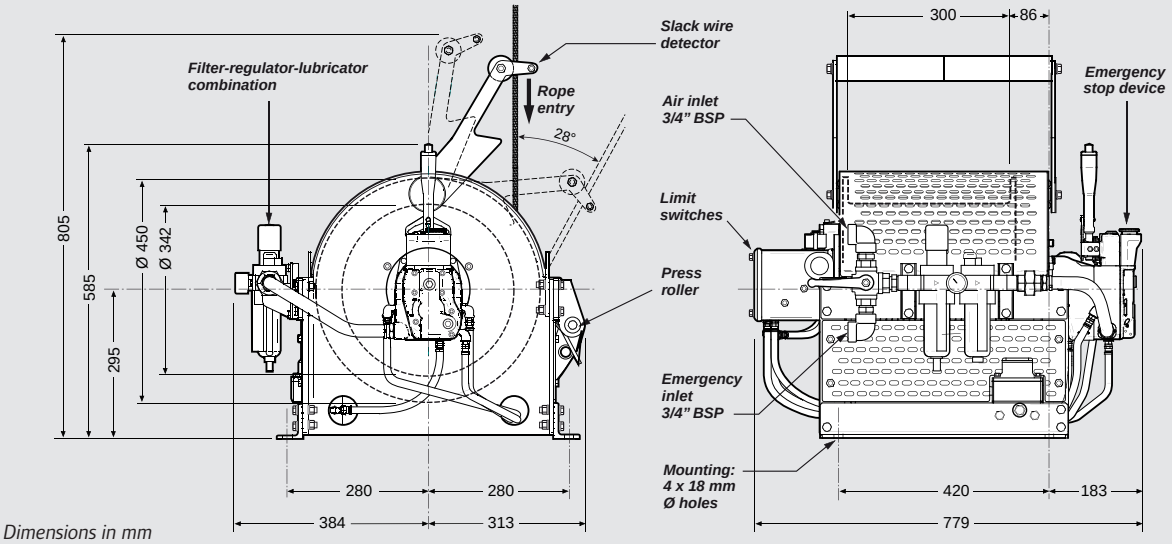

Dimensions in mm

Dimensions are subject to change without notice. Please contact Client Services for certified prints.

FA Infinity™ Series Air Winches

0.15 - 10 t Load Capacity

Setting the standards in winch technology with time savings, and enhanced safety, Ingersoll Rand FA Infinity™ air winches are known throughout the world for their rugged dependability and quality in the harsh environments.

Featuring heavy duty piston motors, internal gear boxes and fabricated steel frames, FA Infinity™ winches can be made in a variety of configurations to suit particular applications.

Features

Rugged and compact design

- 5:1 design factor at rated load.
- Minimum 18:1 drum diameter to wire rope diameter ratio reduces wire rope wear.
- Compact gearbox-in-drum design.
- Group of mechanism as per FEM: 5m.
- Standard design temperature range is 0°C through 60°C.
- "Lift to shift" winch mounted lever throttle.
- Lifting lugs designed for lifting weight of winch plus full drum of wire rope.

Piston Motor

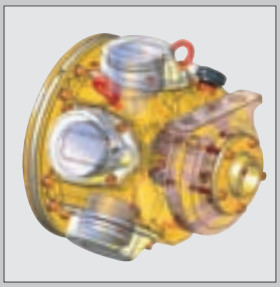

Powerful radial piston air motor

- Positive starting torque.
- Variable speed control. Precision spotting control at slow speeds.
- Superior reliability in harsh environments.
- Internal splash lubrication.

Multiple brake configurations

- Manual drum brake standard (FA10i auto disc is standard).
- Optional auto drum brake and /or auto disc available.
- Enclosed automatic oil bath "wet" disc brake is fully sealed against salt spray, dirt or moisture and provides trouble-free operation over thousands of lifting cycles.

Note: Ingersoll Rand recommends automatic brakes when winches are used for lifting.

FA5i-24AK1J1235L-CE

Meets worldwide standards

- European standards FEM 5M for lifting.
- U.S. standard ANSI / ASME B30.7
- Duty rating FEM 1Bm / ISO M3.
- Most models either carry or have pending Design Approval by Det Norske Veritas (DNV) and/or the American Bureau of Shipping (ABS).

FA Infinity™ C.E. marked models are compliant with the latest European machinery directive No 2006/42/EC and the European standard for power driven winches EN 14492-1. These models include as standard the following safety features:
Drum guard — Overload protection — Emergency stop with main air shut-off valve as per EN 418 — Upper / lower limit switches — Automatic brake — Regulator — Exhaust muffler — CE declaration of conformity.

FA Infinity™ winches are, by design, particularly suitable for use in potentially explosive atmospheres, unlike electric winches.
They are classified as standard as equipment category 2 for applications in zone 1 and 2 (as per ATEX 94/9/CE directive for surface industry).
ATEX marking: **Ex II 2 GD c IIB 135°C X**.

Utility Air Winches

Designed for offshore and harsh industrial environments the robust FA Infinity™ utility winches are available with several drum widths and can be equipped with many options for effective adaptation to your application (see pages 20 to 23 for details).

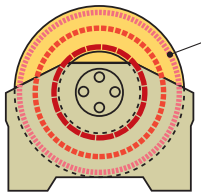

Top layer rating *
(i.e. drum flange diameter less 1.5 times the rope diameter)

** FA Infinity™ winches will always lift the rated load at any layer of wire rope)*

FA7i-24AK1G

Specifications at 6.3 bar dynamic pressure (when winch is running) — Working pressure range 5 to 7 bar.
As per European standard EN 14492-1 – Group of mechanism as per FEM 5M

Model number	Rated capacity at TOP LAYER (kg)	LIFTING SPEED AT RATED LOAD at top rope layer (m/min)	at lowest rope layer (m/min)	Stall pull (kg)	RATED DRUM CAPACITY/ Rope diameter (1)	Air consumption with rated load (m3/min)	Sound level as per EN 14492-1 dB(A)	Net weight (2) (kg)
FA Infinity™ Utility Air Winches / Standard Flange — Lifting Ratings at 5:1 Design Factor								
FA2i-12...	2 000	16	17	4 150	143 m / Ø 13 mm	8	87	346
FA2i-16...					193 m / Ø 13 mm			359
FA2i-20...					248 m / Ø 13 mm			372
FA2i-24...					298 m / Ø 13 mm			386
FA2.5i-8...	2270	40	39	4 670	64 m / Ø 16 mm	20	97	432
FA2.5i-12...					99 m / Ø 16 mm			442
FA2.5i-16...					134 m / Ø 16 mm			455
FA2.5i-20...					168 m / Ø 16 mm			468
FA2.5i-24...					203 m / Ø 16 mm			481
FA5i-16...	5 000	16	16	10 725	188 m / Ø 19 mm	20	97	797
FA5i-20...					237 m / Ø 19 mm			823
FA5i-24...					287 m / Ø 19 mm			849
FA5i-30...					361 m / Ø 19 mm			888
FA5i-36...					435 m / Ø 19 mm			927
FA7i-20...	7 000	12	11	16 305	221 m / Ø 22 mm	21	97	963
FA7i-24...					268 m / Ø 22 mm			1000
FA7i-30...					337 m / Ø 22 mm			1057
FA7i-36...					407 m / Ø 22 mm			1113
FA7i-42...					477 m / Ø 22 mm			1170
FA10i-24...	10 000	7	11	17 525	317 m / Ø 28 mm	23	101	1451
FA10i-30...					400 m / Ø 28 mm			1523
FA10i-36...					484 m / Ø 28 mm			1594
FA10i-40...					539 m / Ø 28 mm			1641
FA Infinity™ Utility Air Winches / Tall Flange — Lifting Ratings at 5:1 Design Factor								
FA5Ti-16...	3 820	21	17	10 725	460 m / Ø 19 mm	20	97	925
FA5Ti-20...					580 m / Ø 19 mm			950
FA5Ti-24...					701 m / Ø 19 mm			977
FA5Ti-30...					882 m / Ø 19 mm			1016
FA5Ti-36...					1063 m / Ø 19 mm			1054
FA7Ti-20...	5 720	15	12	16 305	427 m / Ø 22 mm	21	97	1022
FA7Ti-24...					517 m / Ø 22 mm			1059
FA7Ti-30...					651 m / Ø 22 mm			1116
FA7Ti-36...					785 m / Ø 22 mm			1172
FA7Ti-42...					919 m / Ø 22 mm			1229

(1) Recommended rope diameter – Number of layers and maximum storage rope capacities on following page.
(2) For models with automatic disc brake and lever control.

Utility Air Winches

Rope capacity with recommended rope diameter

For storage capacities with other rope diameters, use our "drum storage calculator" at the following web address:
http://www.ingersollrandproducts.com/lifting/winches/drum.htm

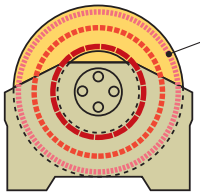

Top layer rating *
(i.e. drum flange diameter less 1.5 times the rope diameter)

The working rope capacity leaves a free space of at least 1.5 times the nominal rope diameter from the top of the drum flanges (EN 14492-1 standard)

Model number	Minimum rope breaking force (kN)	Recommended rope diameter (mm)	Cumulated working rope capacities in meters (1) with RECOMMENDED ROPE DIAMETER												Max. rope storage capacity (m)
			Layer 1	2	3	4	5	6	7	8	9	10	11	12	
FA Infinity™ Utility Air Winches / Standard Flanges — Lifting Ratings at 5:1 Design Factor															
FA2i-12...	10 000	13	19	40	64	88	115	143	—	—	—	—	—	—	204
FA2i-16...			26	55	86	119	155	193	—	—	—	—	—	—	276
FA2i-20...			33	70	110	153	199	248	—	—	—	—	—	—	354
FA2i-24...			40	85	133	184	239	298	—	—	—	—	—	—	426
FA2.5i-8...	11350	16	10	22	35	49	64	—	—	—	—	—	—	—	80
FA2.5i-12...			16	34	54	75	99	—	—	—	—	—	—	—	124
FA2.5i-16...			22	46	73	102	134	—	—	—	—	—	—	—	167
FA2.5i-20...			27	58	92	129	168	—	—	—	—	—	—	—	211
FA2.5i-24...			33	70	111	156	203	—	—	—	—	—	—	—	255
FA5i-16...	25 000	19	25	53	83	116	151	188	—	—	—	—	—	—	269
FA5i-20...			32	67	105	146	190	237	—	—	—	—	—	—	340
FA5i-24...			39	81	127	177	230	287	—	—	—	—	—	—	411
FA5i-30...			49	102	160	223	290	361	—	—	—	—	—	—	517
FA5i-36...			59	123	193	268	349	435	—	—	—	—	—	—	623
FA7i-20...	35 000	22	29	62	97	136	177	221	—	—	—	—	—	—	319
FA7i-24...			35	75	118	164	214	268	—	—	—	—	—	—	385
FA7i-30...			45	94	149	207	270	337	—	—	—	—	—	—	485
FA7i-36...			54	114	179	250	326	407	—	—	—	—	—	—	585
FA7i-42...			63	134	210	293	381	477	—	—	—	—	—	—	685
FA10i-24...	50 000	28	34	73	115	160	209	261	317						376
FA10i-30...			44	92	145	202	264	330	400	—	—	—	—	—	475
FA10i-36...			53	111	175	244	319	399	484	—	—	—	—	—	574
FA10i-40...			59	124	195	273	356	444	539	—	—	—	—	—	640
FA Infinity™ Utility Air Winches / Tall Flanges — Lifting Ratings at 5:1 Design Factor															
FA5Ti-16...	19 100	19	25	53	83	116	151	188	227	269	313	360	408	460	569
FA5Ti-20...			32	67	105	146	190	237	287	340	396	454	516	580	718
FA5Ti-24...			39	81	127	177	230	287	347	411	478	549	623	701	867
FA5Ti-30...			49	102	160	223	290	361	437	517	601	690	784	882	1091
FA5Ti-36...			59	123	193	268	349	435	526	623	725	832	945	1063	1315
FA7Ti-20...	28 600	22	29	62	97	136	177	221	269	319	371	427	—	—	548
FA7Ti-24...			35	75	118	164	214	268	325	385	449	517	—	—	662
FA7Ti-30...			45	94	149	207	270	337	409	485	566	651	—	—	834
FA7Ti-36...			54	114	179	250	326	407	493	585	683	785	—	—	1006
FA7Ti-42...			63	134	210	293	381	477	578	685	799	919	—	—	1178

(1) As per EN 14492-1

See dimensions on pages 26 and 27.

Guideline and Podline Air Winches

As offshore oil drilling heads into deeper waters, Ingersoll Rand Guideline and Podline winches are prepared to follow. These specially configured versions of the FA7Ti tall flange air winch feature:

- Top layer ratings insure "lift at any layer" capability.
- 1067 mm drum flange height and length for maximum wire rope capacity. Other drum flange lengths are available.
- Marine 812 ("P" option) corrosion resistant marine finish paint.
- Locking dog, easy to operate, trouble free and maintenance friendly.
- Winch mounted throttle for precise load control.
- Internal oil bath, automatic disc brake, protected from the elements.

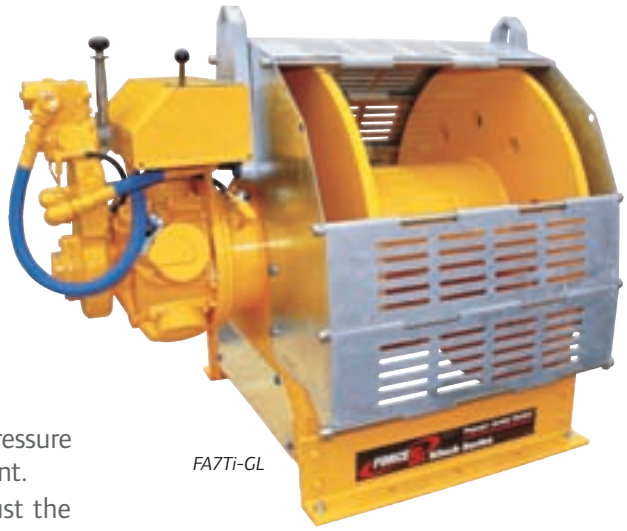

FA7Ti-GL

Specific to the FA7TiGL Guideline winch:

- A lower gear ratio and switching valve arrangement with pressure regulator preset for unmanned lowering of sub-sea equipment.
- In guideline mode, a pressure regulator can be set to adjust the tension.
- Simply flipping a lever switches the winch from utility to guideline mode. In this mode, the winch can be overhauled at speeds up to 28 m/min.

See dimensions on page 27.

Guideline mode control

Locking dog

Specifications at 6.3 bar dynamic pressure (when winch is running) — Working pressure range 5 to 7 bar.
As per European standard EN 14492-1 – Group of mechanism as per FEM 5M

Model number	Rated capacity at TOP LAYER (kg)	LIFTING SPEED AT RATED LOAD at top rope layer (m/min)	at lowest rope layer (m/min)	Stall pull (kg)	RATED DRUM CAPACITY/ Rope diameter (1)	Air consumption with rated load (m^3/min)	Sound level as per EN 14492-1 dB(A)	Net weight (kg)
Lifting Ratings at 5:1 Design Factor								
FA7Ti-GL42…	1540	46	48	4170	4556 m / Ø 13 mm	21	97	1352
FA7Ti-PL42…	4620	18	12	16300	2934 m / Ø 16 mm	21	97	1293

(1) With recommended rope diameter. See below for drum capacities with other rope diameters.

Rope capacity with recommended rope diameters

Model number	Minimum rope breaking force (kN)	Recommended rope diameter (mm)	Cumulated working rope capacities in meters (2) with RECOMMENDED ROPE DIAMETER Layer 1	2	3	4	5	6	Mid drum	Max. working capacity	Max. rope storage capacity (m)
Lifting Ratings at 5:1 Design Factor											
FA7Ti-GL42…	7 700	13	106	219	339	464	596	735	1878	4556 (25th layer)	4820
		16	87	180	280	386	498	616	1153	2934 (20th layer)	3147
		20	70	146	229	317	413	514	735	1707 (15th layer)	2041
		22	63	134	210	293	381	477	578	1462 (14th layer)	1613
FA7Ti-PL42…	23 100	13	106	219	339	464	596	735	1878	4556 (25th layer)	4820
		16	87	180	280	386	498	616	1153	2934 (20th layer)	3147
		20	70	146	229	317	413	514	735	1707 (15th layer)	2041
		22	63	134	210	293	381	477	578	1462 (14th layer)	1613

(2) As per EN 14492-1, the working rope capacity leaves a free space of at least 1.5 times the nominal rope diameter from the top of the drum flanges.

FA Infinity™ Series Air Winches
0.15 - 10 t Load Capacity

Dual Rated Offshore ManRider™ Air Winches

Ingersoll Rand's offering of dedicated and dual purpose (utility & personnel lifting) ManRider™ winches are known worldwide as the standard for meeting the toughest personnel lifting requirements in the industry. Most of these rugged, oilfield tough winches either carry or have pending design approval by Det Norske Veritas (DNV) and/or the American Bureau of Shipping (ABS). Fully type approved models to meet DNV - OS-E101 and ABS - CDS are available upon request. Infinity™ winches also meet UK HSE and PSA regulations for personnel lifting applications.

Meeting world standards

Certified to those standards. Drilling rigs and platforms are used all over the world and come under numerous and diverse regulations. Ingersoll Rand builds to regional and global specifications and our winches can be certified by Det Norske Veritas (DNV), and the American Bureau of Shipping (ABS).

Type approval

A comprehensive design review by a third party addresses intended service, applications, ratings, design calculations, load bearing components, product specifications, and service restrictions or limitations. Plant surveys verify quality control procedures. A Type Approval certificate is then issued for specific units.

FA2.5i-MR12MK1P-E.

Specifications for manriding applications at 6.3 bar dynamic pressure — Working pressure range 5 to 7 bar.
As per DNV regulations – Group of mechanism as per FEM 5M

Model number	Rated capacity at TOP LAYER (kg)	LIFTING SPEED AT RATED LOAD at top rope layer (m/min)	at lowest rope layer (m/min)	Stall pull (kg)	RATED DRUM CAPACITY/ Rope diameter (1)	Air consumption with rated load (m^3/min)	Sound level as per EN 14492-1 dB(A)	Net weight (kg)
Lifting Ratings at 8:1 Design Factor								
FA2i-MR12MK...	1445	23	21	4150	118 m / Ø 13 mm	8	87	375
FA2i-MR24MK...					242 m / Ø 13 mm			420
FA2.5i-MR12MK...	1445	53	44	4670	118 m / Ø 13 mm	20	97	529
FA2.5i-MR24MK...					242 m / Ø 13 mm			574
FA5i-MR16MK...	3120	23	19	10720	151 m / Ø 19 mm	20	97	845
FA5i-MR24MK...					230 m / Ø 19 mm			907

(1) With recommended rope diameter.

Rope capacity with recommended rope diameter / Manriding applications

For storage capacities with other rope diameters, use our "drum storage calculator" at the following web address:
http://www.ingersollrandproducts.com/lifting/winches/drum.htm

Model number	Minimum rope breaking force (kN)	Recommended rope diameter (mm)	Cumulated working rope capacities in meters (2) with RECOMMENDED ROPE DIAMETER Layer 1	2	3	4	5	Max. rope storage capacity (m)	Corresponding number of layers
FA2i-MR12MK...	11 560	13	20	42	65	91	118	210	8
FA2i-MR24MK...			41	86	135	187	242	430	8
FA2.5i-MR12MK...	11560	13	20	42	65	91	118	210	8
FA2.5i-MR24MK...			41	86	135	187	242	430	8
FA5i-MR16MK...	24 960	19	25	53	83	116	151	269	8
FA5i-MR24MK...			39	81	127	177	230	411	8

(2) As per D.N.V.

Specifications for utility applications at 6.3 bar dynamic pressure — Working pressure range 5 to 7 bar.
As per European standard EN 14492-1 – Group of mechanism as per FEM 5M

Model number	Rated capacity at TOP LAYER (kg)	LIFTING SPEED AT RATED LOAD at top rope layer (m/min)	at lowest rope layer (m/min)	Stall pull (kg)	RATED DRUM CAPACITY/ Rope diameter (3)	Air consumption with rated load (m3/min)	Sound level as per EN 14492-1 dB(A)	Net weight (kg)
Lifting Ratings at 5:1 Design Factor								
FA2i-MR12MK...	2000	16	17	4150	147 m / Ø 13 mm	8	87	375
FA2i-MR24MK...					301 m / Ø 13 mm			420
FA2.5i-MR12MK...	2270	40	39	4670	147 m / Ø 13 mm	20	97	529
FA2.5i-MR24MK...					301 m / Ø 13 mm			574
FA5i-MR16MK...	5000	16	16	10720	188 m / Ø 19 mm	20	97	845
FA5i-MR24MK...					287 m / Ø 19 mm			907

(3) With recommended rope diameter.

Rope capacity with recommended rope diameter / Utility applications
For storage capacities with other rope diameters, use our "drum storage calculator" at the following web address:
http://www.ingersollrandproducts.com/lifting/winches/drum.htm

Model number	Minimum rope breaking force (kN)	Recommended rope diameter (mm)	Cumulated working rope capacities in meters (4) with RECOMMENDED ROPE DIAMETER Layer 1	2	3	4	5	6	Max. rope storage capacity (m)	Corresponding number of layers
FA2i-MR12MK...	10 000	13	20	42	65	91	118	147	210	8
FA2i-MR24MK...			41	86	135	187	242	301	430	8
FA2.5i-MR12MK...	11350	13	20	42	65	91	118	147	210	8
FA2.5i-MR24MK...			41	86	135	187	242	301	430	8
FA5i-MR16MK...	25 000	19	25	53	83	116	151	188	269	8
FA5i-MR24MK...			39	81	127	177	230	287	411	8

(4) As per EN 14492-1.

See dimensions on page 28.

TIP:

What features make a winch a ManRider™ ?

- Minimum design factors of 8:1
- Dual brakes
- Drum guards
- Design preview certs and data books upon request (when requested at time of order)

And, depending on where in the world it will be used

- CE certifications
- Overload devices
- Slack wire detectors
- Limit switches
- Emergency shut-offs
- Emergency lowering devices
- Spooling devices

FA Infinity™ Series - Main Options

Automatic drum brake

Drum guard (A option)

Limit switches (option S)

Overload protection with emergency stop

Exhaust mufflers (option J5)

CE package options

The above options are included as standard equipment in all CE marked winches. They are also available as separate options on non-CE winches. The automatic brake is a compulsory equipment for all CE models but it can be an automatic disc brake or an automatic band brake. Please select the automatic brake option from the brake section (see ordering menu) and add to the CE package option.

- **Drum guard:** prevents the operator from inadvertent contact with winch moving parts.
- **Top and bottom limit switches:** automatically stops the winch when the travel exceeds the pre-determined working distance. The mechanism is environmentally protected. Needs to be adjusted on site as per customer configuration/ application.
- **Pneumatic overload protection with emergency stop:** the overload protection automatically stops the winch in case of overload exceeding 125 – 130% of safe working load and brake is automatically activated. The emergency stop allows the operator to quickly stop the winch in case of an emergency situation. Pressing the e-stop button closes a shut-off valve which stops the main air from entering into the motor, brake is applied automatically.
- **Exhaust mufflers (for motor and control):** they consistently reduce the noise level without measurable loss of power. Easy to clean or replace.

Other options available

Remote control

Drum locking pin

Airline accessories

Rope press roller

Remote pilot pendent throttle
The FA Infinity™ Series can be remote controlled by PHS progressive remote pilot pendent up to 20 meters. This pendent includes an emergency stop on the CE version.

Drum locking dog (option L)
Allows to secure the drum for applications that require to maintain loads for long periods.

Airline accessories (options J1, J2 and J3)
A good air quality is a key factor for the longevity and the proper functioning of your equipment. These airline accessories, such as filter, regulator and lubricator are specially adapted to our FA Infinity™ winch for optimal performance.

Rope press roller assembly (option V)
The press roller minimizes tangles and "birdnesting" of the wire rope and increases its life.

Other options available (continued)

Grooved drum

Grooved drum

Ensures better rope spooling than plain drum. Allows a greater rope fleet angle up to 2°.

Construction cage (option E)

Makes using, storing and protecting winches easier than ever. Custom designs for any winch welcome.

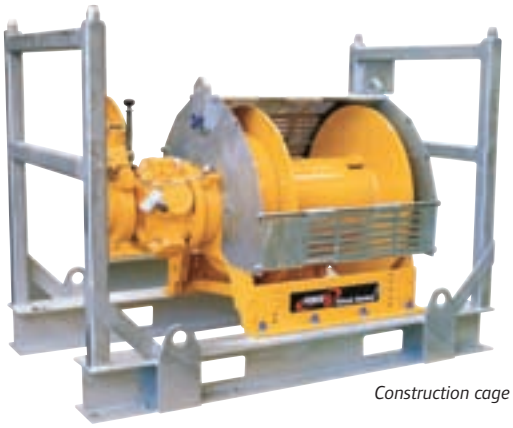

Construction cage

Adjustable Accu-Spool™ system (option Q)

See description on following page.

Electric-over-air pendent control system (control option 5XX)

Pendent Control

Optional pendent for secondary local control

Joystick lever type control

This updated remote control allows unlimited distance between the operator and winch or hoist without the excessive pressure drops, quick exhaust valves and resultant delays found in air control lines. On pendent controls, dialing-in an electrical setting determines the speed. Push buttons provide pay-in or pay-out. For variable speed control, the control buttons are depressed and the dial-in knob provides proportional control.
The joystick lever control provides traditional winch style variable speed in a hand held or wall mounted control box.

Standard features

- Portable, easy to hold control pendent.
- NEMA 4 control box and pendent.
- Holding down the control button and turning the Dial-In control provides variable speed.
- Automatic return-to-centre when joystick is released.
- Emergency stop button on control enclosure.
- Unlimited control length.
- Requires pilot control valve chest for field retrofit.
- Adaptable to most winch models and Hercu-Link hoists.

FA Infinity™ Series Air Winches
0.15 - 10 t Load Capacity

Accu-Spool™ adjustable level wind (option Q)

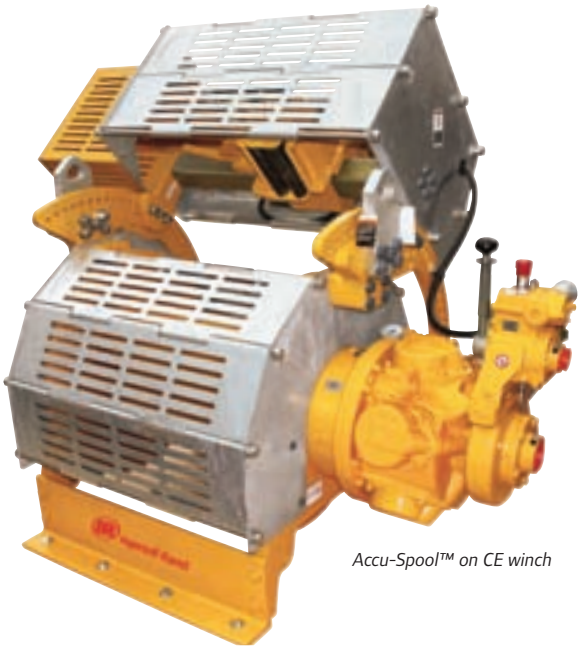

Accu-Spool™ on CE winch

2 hp radial piston drive motor. Fully enclosed oil bath gear box

Pressure sensing guide rollers

Precision cut rack & pinion drive assembly

Features and benefits

Accu-Spool™ replaces the need for conventional level winding systems. It is available as optional equipment for Ingersoll Rand FA Infinity™ winch Series (except for FA150KGi manriding model).

The pressure activated sensor drive is self adjusting, eliminating the wear and timing issues inherent in diamond screw designs.

This system compensates for fleet angles between 1.5° to 26°.

- Heavy duty radial piston drive motor.
- Fully enclosed oil bath gearbox.
- Precision cut rack and pinion drive assembly.
- Field adjustable to accommodate a variety of wire rope take-off angles.
- Configures for both overwound and under-wound wire rope take-off.
- Accepts a range of wire rope sizes without any adjustments to system.
- Manual override of controls for no-load spooling. Accu-Spool™ comes with an independent remote pilot pendent control, allowing the drive head to be moved when the winch is not operating.
- Promotes uniform and even spooling of wire rope.
- Reduces bird nesting and associated problems such crushing and abrasion.

How to order:

Begin with the base model driver and pricing of the FA Infinity™ Series winch you have selected.

Add the model driver option code: "Q" to the your winch model (see ordering menu on following page for complete winch model driver guide).

Note:

If the desired wire rope take-off angle is provided at time of an order the adjustable Accu-Spool™ will be preset for this angle prior to shipment. Otherwise the setting will be at the discretion of the factory.

To prevent inadvertent contact with moving parts only automatic brakes are available on adjustable Accu-Spool™ level winds.

Not all standard FA Infinity™ Series winch options are compatible with the Accu-Spool™ level wind due to mechanical or regulatory issues.

Option **not** compatible with the Accu-Spool™ system:

– Tall flange drums (FA5T and FA7T).

– Manual drum brakes (M brake option).

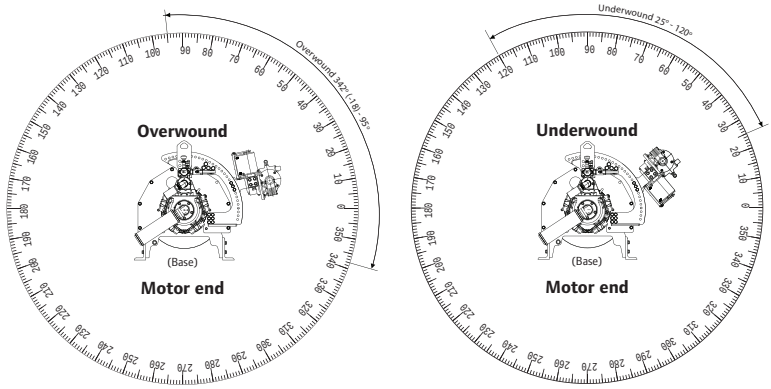

Adjustable Accu-Spool™ wire rope take-off range

FA Infinity™ Series - Ordering Menu

To order your winch, specify complete model number code as shown below:

FA Infinity™ Series winches in CE version are fitted as standard with:

- Drum guard
- Pneumatic overload protection device with emergency stop valve (main air shut-off).
- Rotary limit switches (top and bottom).
- Automatic brake (to be selected between automatic disc brake and automatic drum brake, or both).
- Exhaust mufflers (for control and motor).

FA7i – 24 X K 220 PV – CE

FA Infinity™ Series capacity	Drum length	Drum brake	Disc brake	Control
Utility winches **FA2i** 2000 kg capacity **FA2.5i** 2270 kg capacity **FA5i** 5000 kg capacity **FA7i** 7000 kg capacity **FA10i** 10 000 kg capacity	**See below available drum lengths per model** **8** 8 inches (203 mm) **12** 12 inches (305 mm) **16** 16 inches (406 mm) **20** 20 inches (508 mm) **24** 24 inches (610 mm) **30** 30 inches (750 mm) **36** 36 inches (914 mm) **40** 40 inches (1016 mm) **42** 42 inches (1050 mm)	**A** Auto drum brake **M** Manual drum brake **X** No drum brake	**K** Auto disc brake **X** No auto disc brake	**1** Throttle lever **2XX** Remote full flow lever throttle **3XX** Remote pilot pendent throttle **4XX** Remote pilot lever throttle **5XX** Electric over air control *(XX = Specify hose length in feet)*
Utility winches / tall flange **FA5Ti** 3820 kg capacity, **FA7Ti** 5720 kg capacity				
Dual rated winches **FA2i-MR** 1445/2000 kg capacity **FA2.5i-MR** 1445/2270 kg capacity **FA5i-MR** 3120/5000 kg capacity	**12** 12 inches (305 mm) **16** 16 inches (406 mm) **24** 24 inches (610 mm)	**A** Auto drum brake **M** Manual drum brake	**K** Auto disc brake	
Guideline / podline winches **FA7Ti-GL** 1540 kg capacity **FA7Ti-PL** 4620 kg capacity	**42** 42 inches (1050 mm)	**X** No drum brake	**K** Auto disc brake	**1** Throttle lever

Options	
7	Drum grooving (specify rope size in sixteenths of an inch, e.g. 7 = 7/16").
B	Extended warranty.
C1M3	-20° C ABS.
C2M3	-20° C DNV.
E	Construction cage.
G	Drum guard.
J	Airline accessories (1).
L	Drum locking pin (not available for dual rating winches).
M1	Material traceability - Per DIN 50049/EN10204 Para 2.2 "Typicals" (2).
M2	Material traceability - Per DIN 50049/EN10204 Para 3.1 actual per product as purchased (2).
M3	Material traceability - Per DIN 50049/EN10204 Para 3.1 actual per product as delivered in final condition (2).
N4	Manufactured under ABS survey.
N5	Manufactured under DNV survey.
P	Marine 812 finish paint.
P1	Marine 812-X paint system.
P2	Marine 812-X paint system, isocyanate free.
Q	Adjustable Accu-Spool™
S	Rotary limit switch (upper and lower).
U	Underwound wire rope takeoff.
V	Press roller.
W1	ABS witness test.
W2	DNV witness test.
W3	LRS witness test.
W4	Client witness of load test.
Y	Overload protector with E-Stop provided on lever throttle.
-CE	Compliance with the European machinery directive.

Standard drum lengths available in inches

Model no.	Drum length in inches								
	8"	12"	16"	20"	24"	30"	36"	40"	42"
FA2i		✔	✔	✔	✔				
FA2.5i	✔	✔	✔	✔	✔				
FA5i			✔	✔	✔	✔	✔		
FA7i				✔	✔	✔	✔		✔
FA10i					✔	✔	✔	✔	
FA5Ti			✔	✔	✔	✔	✔		
FA7Ti				✔	✔	✔	✔		✔
FA2i-MR		✔			✔				
FA2.5i-MR		✔			✔				
FA5i-MR			✔		✔				
FA7Ti-GL									✔
FA7Ti-PL									✔

(1) Airline accessories: *add 1 for filter, 2 for lubricator, 3 for regulator, 4 for strainer, 5 for muffler and 6 for liquidator, e.g. J123. For protection during shipment and due to the wide range of installation variables, the airline accessories are shipped loose for client installation.*

(2) M1, M2 and M3 options:

M1 *– Material traceability certificates according to EN 10204 (Ex DIN 50049) 2.2 on load bearing parts. This conformity document affirms (by the manufacturer) that parts are in compliance with the requirements of the order based on non-specific inspection and testing (i.e., results are typical material properties for these parts).*

M2 *– Material traceability certificates according to EN 10204 (Ex DIN 50049) 3.1 on load bearing parts. These documents affirm (by a department independent of the manufacturing department) that the actual parts used in the product are in compliance with the order based on specific inspection and testing (i.e., results are actual material properties for those parts).*

M3 *– Material traceability certificates according to EN 10204 (Ex DIN 50049) 3.1 on load bearing parts. These documents affirm (by a department independent of the manufacturing department) that the actual parts used in the product are in compliance with the order based on specific inspection and testing (i.e., results are actual material properties for those parts in a finished, as delivered condition).*

FA Infinity™ Series Air Winches
0.15 - 10 t Load Capacity

FA150KGi-MR Dedicated ManRider™

FA150KGi ManRider™ winches have been designed to meet the requirements of the oil exploration industry, particularly those specifications of the Norwegian Petroleum Directorate and DNV. Most models either carry or have pending design approval by Det Norske Veritas (DNV) and/or the American Bureau of Shipping (ABS). Fully type approved units available by ordering "N4" (ABS) or "N5" (DNV) options.
Note: It remains the user's responsibility to determine the suitability of this product for any particular use and to check for compliance with applicable regulations.

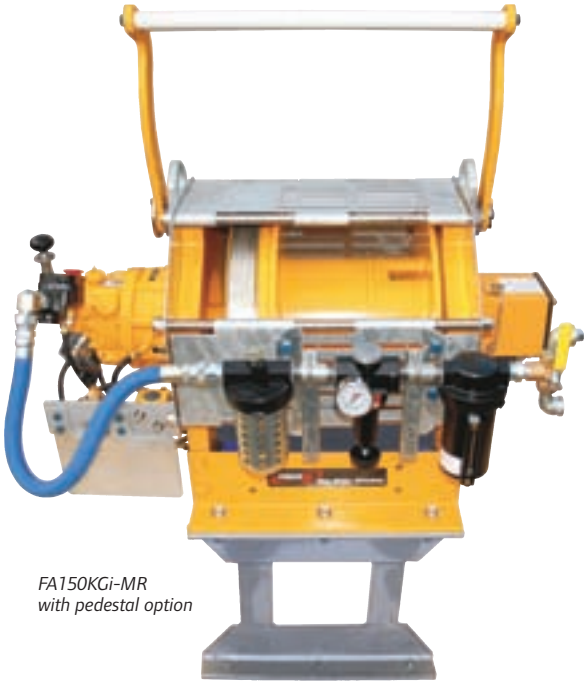

FA150KGi-MR with pedestal option

Features

- Piston type air motor
- Automatic internal disc brake.
- Automatic drum brake.
- Slack rope detector.
- Emergency stop and overload limiter.
- Standard design temperature is -20°C.
- Emergency lowering device.
- Lift to shift lever throttle.
- Rotary limit switch.
- Drum guard.
- Press roller.
- Filter, regulator, lubricator air preparation package.
- Muffler.
- 10:1 design factor.
- 18:1 D/d ratio on wire rope.
- CE compliance.
- Marine 812 finish paint "P" standard.

FA150KGi-MR with emergency lowering system option

See dimensions on page 28.

Specifications at 6.3 bar dynamic pressure (when winch is running) – **As per DNV regulations**

Model number	Rated capacity at top layer (kg)	LIFTING SPEED AT RATED LOAD at top rope layer (m/min)	at lowest rope layer (m/min)	Rated number of layers	Air consumption with rated load (m^3/min)	Sound level as per EN 14492-1 dB(A)	Weight without rope (kg)	ATEX marking Ex II 2 GD c IIB 135°C X
Lifting Ratings at 10:1 Design Factor								
FA150KGi-MR	150	29	25	8	14	89	340	√

Rope capacity in meters
For personnel lifting winches, the working rope capacity corresponds to max. storage capacity les 2.5 layers (i.e. less 25 mm with 10 mm dia. rope)

Model number	Minimum rope breaking force (kN)	Recommended rope diameter (mm)	Cumulated working rope capacities in meters with RECOMMENDED ROPE DIAMETER Layer 1	Layer 2	Layer 3	Layer 4	Layer 5	Layer 6	Layer 7	Layer 8	Maximum rope storage capacity (m)
FA150KGi-MR	15	10	26	54	84	115	148	183	220	259	385

For storage capacities with other rope diameters, use our "drum storage calculator" at the following web address:
http://www.ingersollrandproducts.com/lifting/winches/drum.htm

FA150KGi-MR main options

Stainless steel hose package

Manual rope guide

Emergency lowering system

Pedestal base

Type approved models available
Certified to DNV-OS-E101 drilling plant or ABS certification of Drilling Systems.

Marine paint systems
The FA150KGi-MR is delivered as standard with a marine 812 finish paint. Two additional finishing levels are available as an option; marine 812-X paint system and marine 812-X paint system / isocyanate free (detailed list of components and treatments available on request).

Stainless steel hoses
Stainless steel braid reinforced hoses and stainless steel fittings.

Manual rope guide
Manual rope guide mounted on drum guard is available for better rope winding at no load operation.

Emergency lowering system
Per regulatory requirements every FA150KGi-MR winch is equipped with an emergency lowering device (ELD) to allow an (end user supplied) auxiliary air supply to be attached to the winch to facilitate emergency lowering in the event the main air supply is lost. Option "R" is a complete emergency lowering system which includes tank that serves as the air source during emergency lowering. No end user provided lower the load and the accumulator is charged during normal winch operation.

Pedestal base
It allows to raise the winch to working height. Galvanised steel.

Ordering menu
To order your winch, specify complete model number code as shown below:

FA150KGi **MR** **12** **A** **1** **BHRP1** – **CE**

Series / capacity	Type	Drum length	Brakes	Control	Options	CE conformity
FA Series, 150 kg capacity	**MR** ManRider	**12** 12 inches	**A** Automatic drum brake	**1** Lever control	**7** Drum grooving; specify rope size in sixteenths, e.g., 7 = 7/16". **A** Drum guard with manual rope guide. **B** Winch pedestal base. **C1M3** -20° C - ABS. **C2M3** -20° C - DNV. **H** Stainless steel hose package for limit switch. **K** Stowage valve kit installed on winch. **M1** Material traceability per DIN 50049/EN10204 Para 2.2 "typicals". **M2** Material traceability per DIN 50049/EN10204 Para 3.1 actual. per product as purchased. **M3** Material traceability per DIN 50049/EN10204 Para 3.1 actuals. per product as delivered in final condition. **N4** Manufactured under ABS survey. **N5** Manufactured under DNV survey. **P1** Marine 812-X paint system. **P2** Marine 812-X paint system - isocyanate free. **R** Emergency lowering system (2 litre bottle). **W1** ABS witness test. **W2** DNV witness test. **W3** LRS witness test. **W4** Client witness of load test.	**-CE** Compliance with the European machinery directive

M1 *– Material traceability certificates according to EN 10204 (Ex DIN 50049) 2.2 on load bearing parts. This conformity document affirms (by the manufacturer) that parts are in compliance with the requirements of the order based on non-specific inspection and testing (i.e., results are typical material properties for these parts).*

M2 *– Material traceability certificates according to EN 10204 (Ex DIN 50049) 3.1 on load bearing parts. These documents affirm (by a department independent of the manufacturing department) that the actual parts used in the product are in compliance with the order based on specific inspection and testing (i.e., results are actual material properties for those parts).*

M3 *– Material traceability certificates according to EN 10204 (Ex DIN 50049) 3.1 on load bearing parts. These documents affirm (by a department independent of the manufacturing department) that the actual parts used in the product are in compliance with the order based on specific inspection and testing (i.e., results are actual material properties for those parts in a finished, as delivered condition).*

FA2i to FA10i Utility Air Winches (standard flanges)

FA2i to FA10i with disc brake only

Dimensions are subject to change without notice. Please contact Client Services for certified prints.

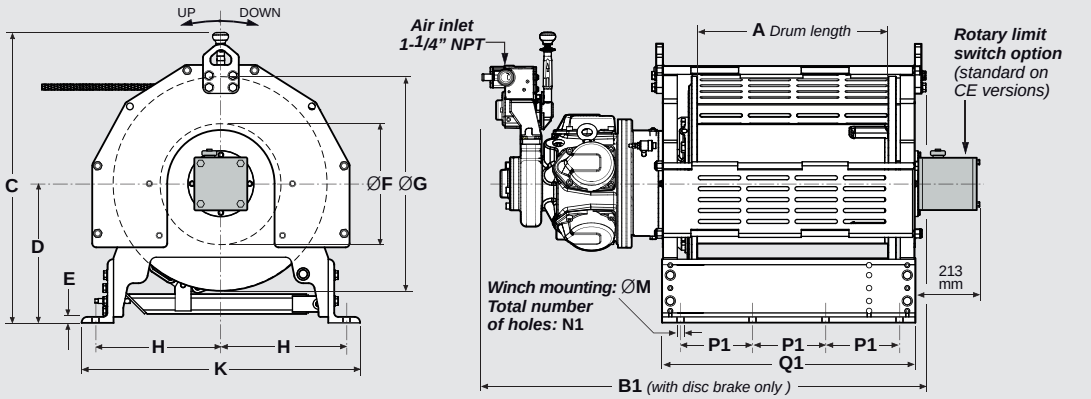

FA2i to FA10i with drum brake or with both drum brake and disc brake

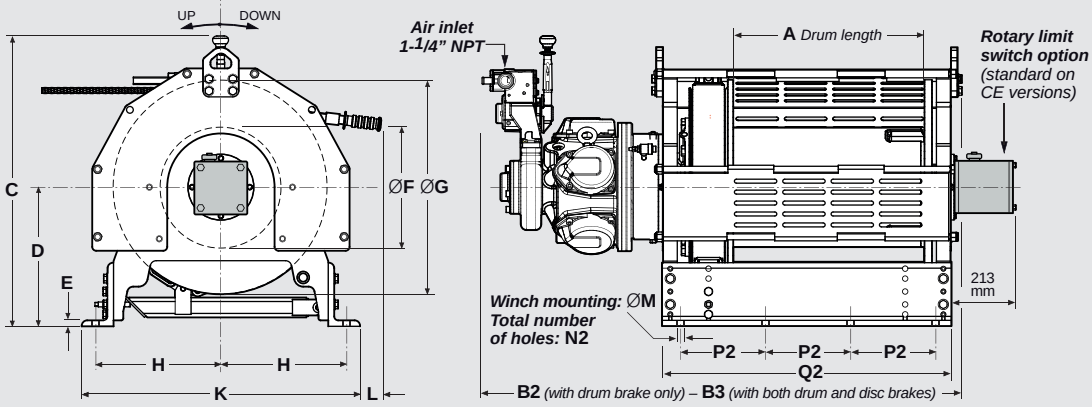

Dimensions in mm

Model no.	A	B1	B2	B3	C	D	E	F	G	H	K	L	M	N1	N2	P1	P2	Q1	Q2
FA2i-12...	305	968	945	1036	722	356	13	273	483	254	610	125	18	6	6	191	229	511	579
FA2i-16...	406	1069	1046	1138	722	356	13	273	483	254	610	125	18	8	8	159	191	612	681
FA2i-20...	508	1171	1148	1240	722	356	13	273	483	254	610	125	18	8	8	197	229	714	782
FA2i-24...	610	1273	1250	1341	722	356	13	273	483	254	610	125	18	8	8	229	254	816	884
FA2.5i-8...	203	996	986	1062	839	356	13	273	483	254	610	125	18	6	6	152	178	409	478
FA2.5i-12...	305	1097	1087	1163	839	356	13	273	483	254	610	125	18	6	6	203	229	511	579
FA2.5i-16...	406	1199	1189	1265	839	356	13	273	483	254	610	125	18	8	8	178	191	612	681
FA2.5i-20...	508	1300	1290	1367	839	356	13	273	483	254	610	125	18	8	8	203	229	714	782
FA2.5i-24...	610	1402	1392	1468	839	356	13	273	483	254	610	125	18	8	8	229	254	816	884
FA5i-16...	406	1204	1234	1311	928	445	19	381	686	397	889	66	21	6	6	159	229	605	720
FA5i-20...	508	1306	1336	1412	928	445	19	381	686	397	889	66	21	8	8	216	254	707	821
FA5i-24...	610	1407	1438	1514	928	445	19	381	686	397	889	66	21	8	8	229	267	809	923
FA5i-30...	762	1560	1590	1666	928	445	19	381	686	397	889	66	21	8	10	305	254	961	1075
FA5i-36...	914	1712	1742	1819	928	445	19	381	686	397	889	66	21	8	10	356	279	1114	1228
FA7i-20...	508	1356	1367	1443	1084	508	19	406	762	435	965	71	24	8	10	229	203	778	868
FA7i-24...	610	1458	1468	1544	1084	508	19	406	762	435	965	71	24	10	10	203	229	880	970
FA7i-30...	762	1610	1621	1697	1084	508	19	406	762	435	965	71	24	10	10	241	254	1032	1122
FA7i-36...	914	1763	1773	1849	1084	508	19	406	762	435	965	71	24	12	10	216	279	1184	1275
FA7i-42...	1067	1915	1925	2002	1084	508	19	406	762	435	965	71	24	12	12	254	254	1337	1427
FA10i-24...	610	1519	1615	1621	1213	533	15	508	965	537	1179	31	24	12	12	152	152	952	1054
FA10i-30...	762	1671	1768	1773	1213	533	15	508	965	537	1179	31	24	12	12	203	203	1105	1207
FA10i-36...	914	1824	1920	1925	1213	533	15	508	965	537	1179	31	24	12	12	203	203	1257	1359
FA10i-40...	1067	1920	2022	2027	1213	533	15	508	965	537	1179	31	24	12	12	203	203	1359	1461

FA5Ti, FA10Ti Utility Air Winches (tall flanges) and Guideline / Podline Winches

FA5Ti and FA7Ti with disc brake only

FA7Ti-GL and FA7Ti-PL

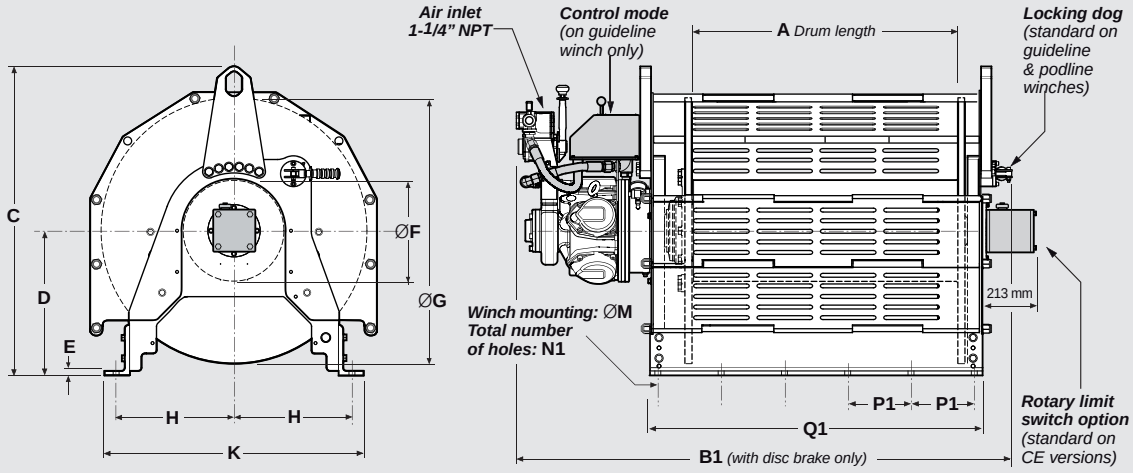

FA5Ti and FA7Ti with drum brake or with both drum brake and disc brake

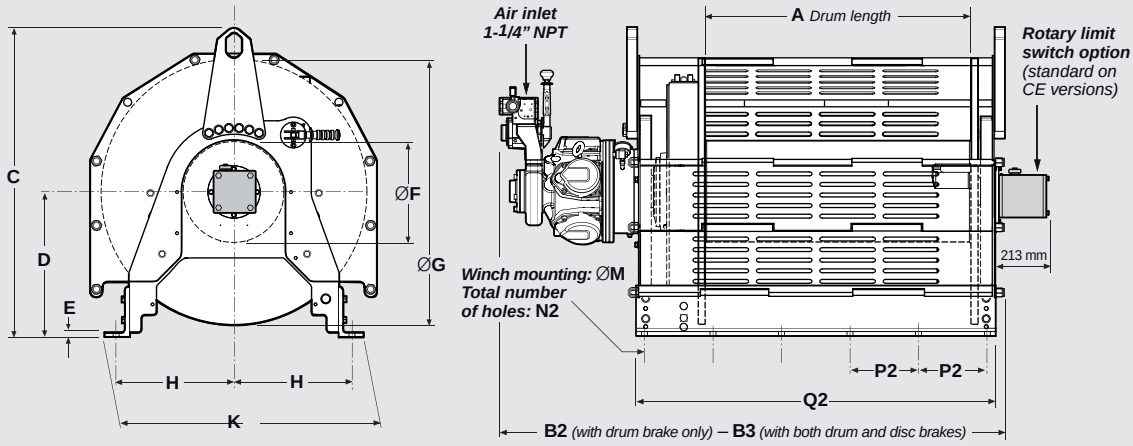

Dimensions are subject to change without notice. Please contact Client Services for certified prints.

Dimensions in mm

Model number	A	B1	B2	B3	C	D	E	F	G	H	K	M	N1	N2	P1	P2	Q1	Q2
FA5Ti-16…	406	1204	1234	1311	1086	508	19	381	889	435	965	21	6	6	159	229	605	720
FA5Ti-20…	508	1306	1336	1412	1086	508	19	381	889	435	965	21	8	8	216	254	707	821
FA5Ti-24…	610	1407	1438	1514	1086	508	19	381	889	435	965	21	8	8	229	267	809	923
FA5Ti-30…	762	1560	1590	1666	1086	508	19	381	889	435	965	21	8	10	305	254	961	1075
FA5Ti-36…	914	1712	1742	1819	1086	508	19	381	889	435	965	21	8	10	356	279	1114	1228
FA7Ti-20…	508	1356	1367	1443	1084	508	19	406	914	435	965	24	8	10	229	203	778	868
FA7Ti-24…	610	1458	1468	1544	1084	508	19	406	914	435	965	24	10	10	203	229	880	970
FA7Ti-30…	762	1610	1621	1697	1084	508	19	406	914	435	965	24	10	10	241	254	1032	1122
FA7Ti-36…	914	1763	1773	1849	1084	508	19	406	914	435	965	24	12	10	216	279	1184	1275
FA7Ti-42…	1067	1915	1925	2002	1084	508	19	406	914	435	965	24	12	12	254	254	1337	1427
FA7Ti-GL42…	1067	1984	—	—	1240	581	19	406	1067	473	1041	24	12	—	254	—	1337	—
FA7Ti-PL42…	1067	1984	—	—	1240	581	19	406	1067	473	1041	24	12	—	254	—	1337	—

FA Infinity™ Series Air Winches
0.15 - 10 t Load Capacity

Dual Rated Offshore ManRider™ Air Winches

FA2i-MR...
FA2.5i-MR...
and
FA5i-MR

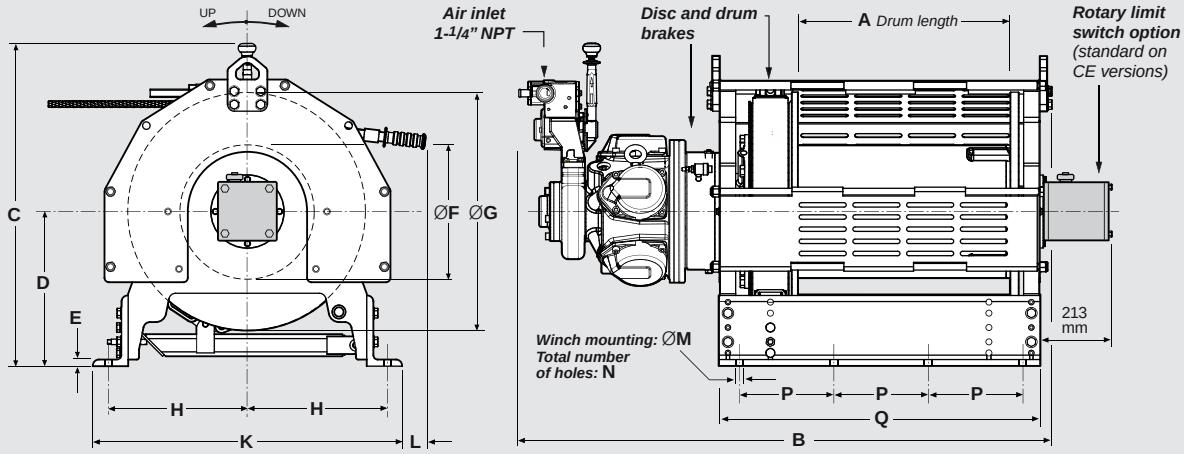

Dimensions in mm

Model number	A	B	C	D	E	F	G	H	K	L	M	N	P	Q
FA2i-MR12MK...	305	1036	723	356	13	273	483	254	610	125	18	6	191	579
FA2i-MR24MK...	610	1341	723	356	13	273	483	254	610	125	18	8	229	884
FA2.5i-MR12MK...	305	1168	839	356	13	273	483	254	610	125	18	6	191	579
FA2.5i-MR24MK...	610	1473	839	356	13	273	483	254	610	125	18	8	229	884
FA5i-MR16MK...	406	1311	928	444	19	381	686	397	889	68	21	6	191	719
FA5i-MR24MK...	610	1514	928	444	19	381	686	397	889	68	21	8	197	922

FA150KGi-MR Dedicated ManRider™

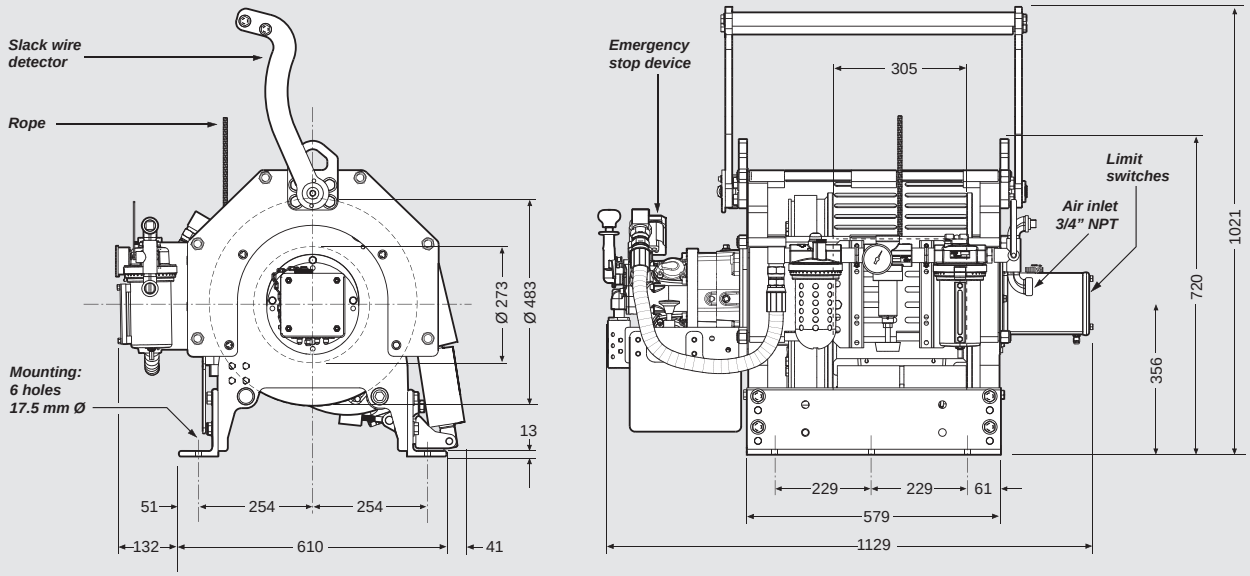

Dimensions are subject to change without notice. Please contact Client Services for certified prints.

Ingersoll Rand ARO-Flo Series

These filters, regulators, lubricators and FRL combinations are designed to keep your air supply in top condition, as well as enable your winch to operate at its peak performance.

Features

- Robust cast aluminium body.
- High-flow filter element with 5-micron filtration.
- Automatic drain.
- Reinforced metal bowls with sight glass.

FRL combinations 3/8" to 1":

- Regulated pressure 0-9.7 bar, max. inlet pressure 17 bar. Flush mount gauge and T-shape wall mount brackets included.

Separated filter, regulator and lubricator 1 1/4" and 1 1/2":

- Regulated pressure 0-8.5 bar, max. inlet pressure 20.7 bar. Gauge and connection nipples to be ordered separately.

NOTE: *our dedicated ManRider™ air winches are fitted with an air treatment equipment mounted as standard on the product and do not require, as a result, the equipment described hereafter.*

C383E1-811
3/4" combined FRL

C384F1-811
1" combined FRL

F355G1-411
1 1/4" filter

R375G1-100
1 1/4" regulator

L365G1-110
1 1/4" lubricator

104502 gauge

ARO-Flo Series equipment is exempt from the EU Directives 2002/95/EC (CE compliance), and 94/9/EC (ATEX 95). ARO-Flo Series is Silicon free and meets 2002/95/EC (RoHS compliance).

Winch model	Winch air inlet size	FRL size	FRL combination part no.	Filter part no.	Regulator part no.	Gauge part no.	Lubricator part no.	Nipple part no. (1)
For Liftstar®, Pullstar® and FA Infinity™ Series								
LS2-300R… LS2-600R…	3/4" BSP	3/4" BSP	C383E1-811	—	—		—	
LS-1500R…	1" BSP	1" BSP	C384F1-811					
LS2000R… LS5000R…	1 1/4" BSP	1 1/4" BSP	—	F355G1-411	R375G1-100	104502	L365G1-110	38751038
PS2-1000R…	3/4" BSP	3/4" BSP	C383E1-811	—	—	—	—	—
PS2400R…	1" BSP	1" BSP	C384F1-811					
PS4000R… PS10000R…	1 1/4" BSP	1 1/4" BSP	—	F355G1-411	R375G1-100	104502	L365G1-110	38751038
FA2…	1 1/4" NPT	1 1/4" NPT	—	F35571-411	R37571-100	104502	L36571-110	38751038
FA2.5… FA5… FA7… FA10…	1 1/4" NPT	1 1/2" NPT	—	F35581-411	R37581-100	104502	L36581-110	NA

(1) Two nipples have to be ordered to assemble the filter / regulator / lubricator module.